NOTES

STIRRUPS IN CAP MAY BE SHIFTED AS NECESSARY TO CLEAR DOWELS.

THE CONCRETE IN THE SHADED AREA OF THE WING SHALL BE POURED AFTER THE VERTICAL CONCRETE BARRIER RAIL IS CAST IF SLIP FORMING IS USED.

FOR PILE SPLICE DETAILS, SEE SHEET 4 OF 4.

FOR WING DETAILS, SEE SHEET 3 OF 4.

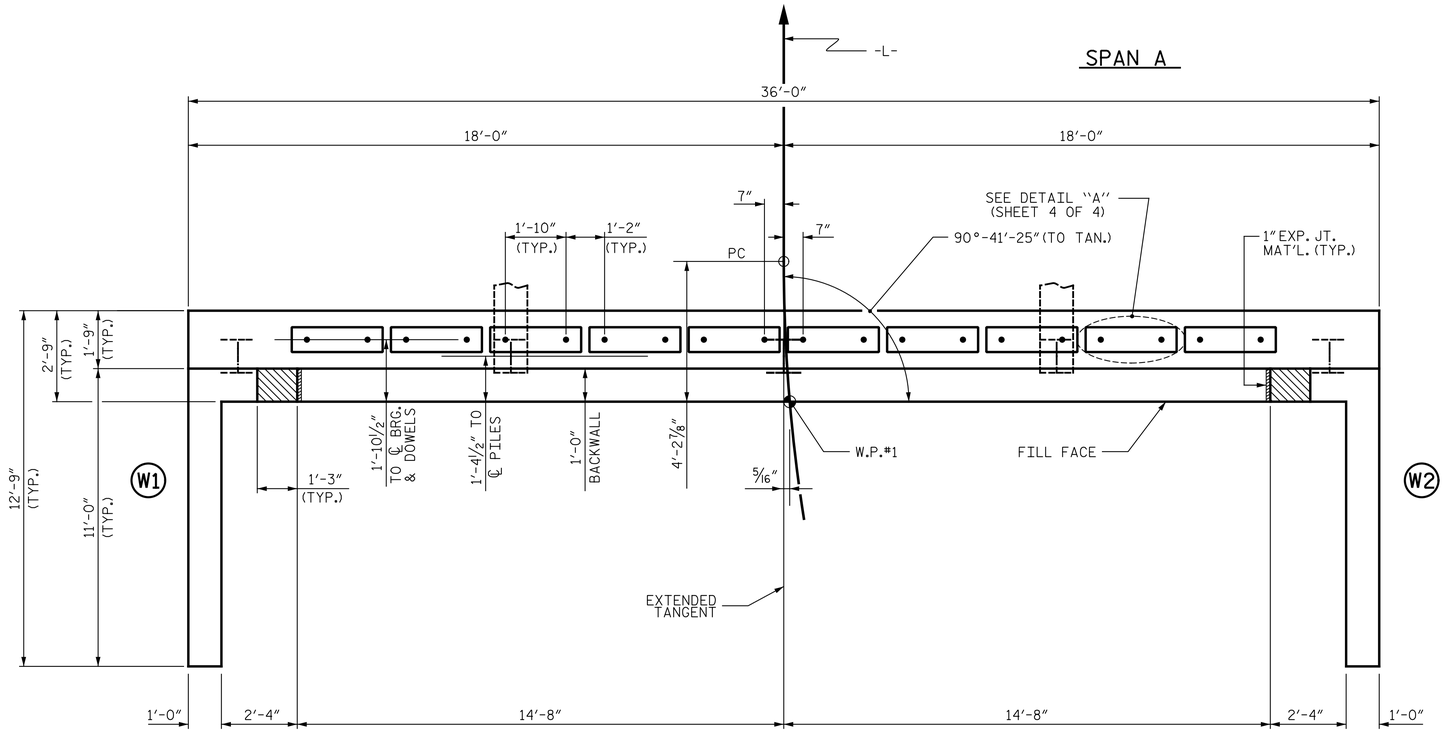

PLAN

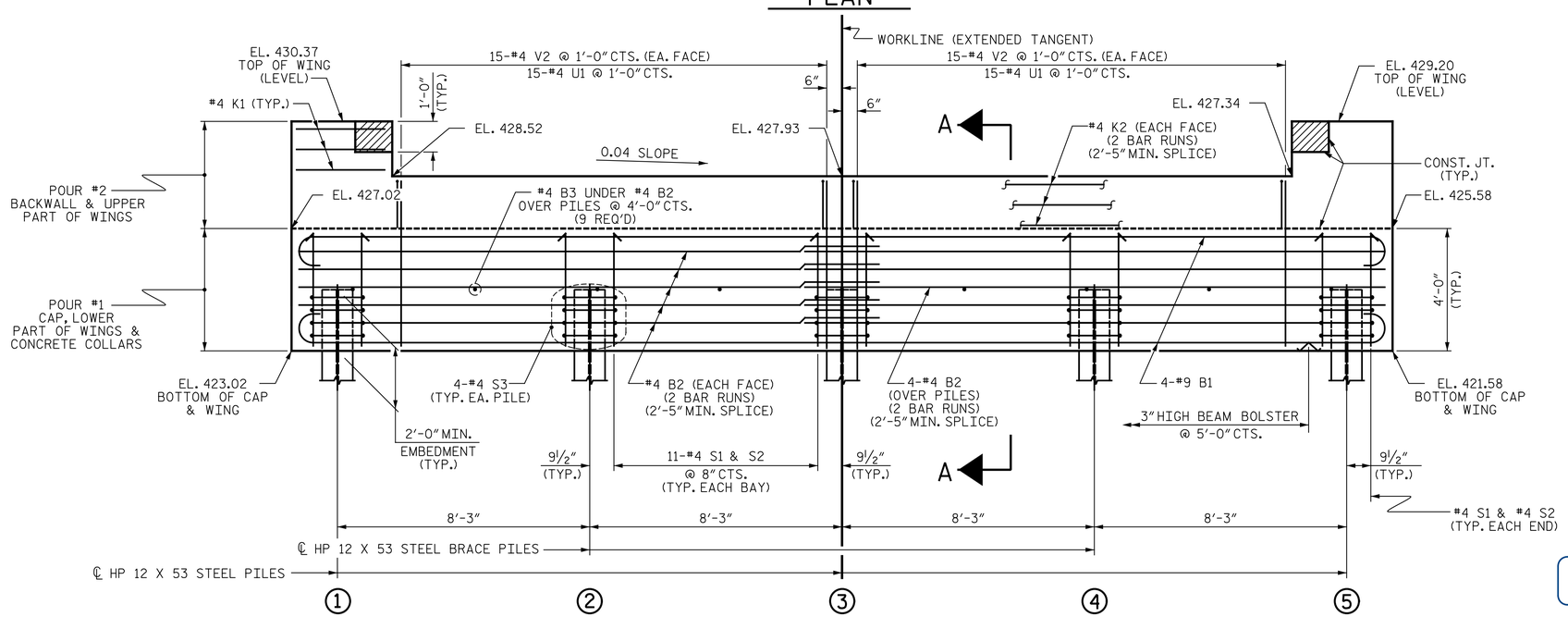

ELEVATION

WINGS NOT SHOWN FOR CLARITY.
FOR SECTION A-A, SEE SHEET 4 OF 4.
CONCRETE COLLARS FOR STEEL PILES NOT SHOWN IN PLAN AND ELEVATION VIEWS FOR CLARITY.
SEE "CORROSION PROTECTION FOR STEEL PILES DETAIL", SHEET 4 OF 4.

TOP OF PILE ELEVATIONS	
1	424.96
2	424.63
3	424.30
4	423.97
5	423.64

PROJECT NO. 17BP.8.R.122
MONTGOMERY COUNTY
STATION: 14+98.50 -L-

SHEET 1 OF 4

DESIGN ENGINEER OF RECORD: DocuSigned by: DB3C8E45E06D42D...	DATE : 2/5/2018	
ASSEMBLED BY : R. C. LARSON	DATE : 12/29/17	
CHECKED BY : R. A. PRUETT	DATE : 01/02/18	
DRAWN BY : WJH 12/11	REV. 4/15	MAA/TMG
CHECKED BY : AAC 12/11		

DocuSigned by: DB3C8E45E06D42D...
NORTH CAROLINA PROFESSIONAL SEAL 14114 ENGINEER ROBERT C. LARSON
2/5/2018

DOCUMENT NOT CONSIDERED FINAL UNLESS ALL SIGNATURES COMPLETED

ENGINEERS • PLANNERS • SCIENTISTS • CONSTRUCTION MANAGERS LICENSE NUMBER: C-0764
KCI Associates of North Carolina, P.A.
4505 Falls of Neuse Road, Suite 400 Raleigh, NC 27609-6270 Phone (919) 783-9214
DWG. REF. NO. 13 OF 21

STATE OF NORTH CAROLINA
DEPARTMENT OF TRANSPORTATION
RALEIGH

SUBSTRUCTURE

END BENT 1

REVISIONS								SHEET NO.
		BY:	DATE:	NO.	BY:	DATE:		S-13
1				3				TOTAL SHEETS
2				4				21

STD. NO. EB_30_90S4_33BB